DB3 DB4 SMDB3

DIAC

FEATURES

- V_{BO} : 32V and 40V
- LOW BREAKOVER CURRENT

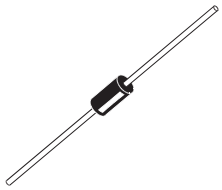

DO-35
(DB3 and DB4)

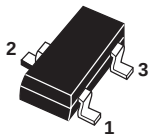

SOT-23
(SMDB3)*
Pin 1 and 3 must be shorted together

DESCRIPTION

Functioning as a trigger diode with a fixed voltage reference, the DB3/DB4 series can be used in conjunction with triacs for simplified gate control circuits or as a starting element in fluorenscent lamp ballasts.

A new surface mount version is now available in SOT-23 package, providing reduced space and compatibility with automatic pick and place equipment.

ABSOLUTE MAXIMUM RATINGS (limiting values)

Symbol	Parameter		Value	Unit
I_{TRM}	Repetitive peak on-state current tp = 20 µs F= 120 Hz	SMDB3	1.00	A
		DB3 / DB4	2.00	
Tstg Tj	Storage temperature range Operating junction temperature range		- 40 to + 125	°C

Note: * SMDB3 indicated as Preliminary spec as product is still in development stage.

ELECTRICAL CHARACTERISTICS (Tj = 25°C unless otherwise specified)

Symbol	Parameter	Test Conditions		SMDB3	DB3	DB4	Unit
V_{BO}	Breakover voltage *	C = 22nF **	MIN.	28	28	35	V
			TYP.	32	32	40	
			MAX.	36	36	45	
$I V_{BO1} - V_{BO2} I$	Breakover voltage symmetry	C = 22nF **	MAX.	3			V
ΔV	Dynamic breakover voltage *	V_{BO} and V_F at 10mA	MIN.	10	5		V
V_O	Output voltage *	see diagram 2 (R=20Ω)	MIN.	10	5		V
I_{BO}	Breakover current *	C = 22nF **	MAX.	10	50		µA
tr	Rise time *	see diagram 3	MAX.	0.50	2		µs
I_R	Leakage current *	V_R = 0.5 V_{BO} max	MAX.	1	10		µA
I_P	Peak current *	see diagram 2 (Gate)	MIN.	1	0.30		A

* Applicable to both forward and reverse directions.

** Connected in parallel to the device.

PRODUCT SELECTOR

Part Number	V_{BO}	Package
SMDB3	28 - 36	SOT-23
DB3	28 - 36	DO-35
DB4	35 - 45	DO-35

ORDERING INFORMATION

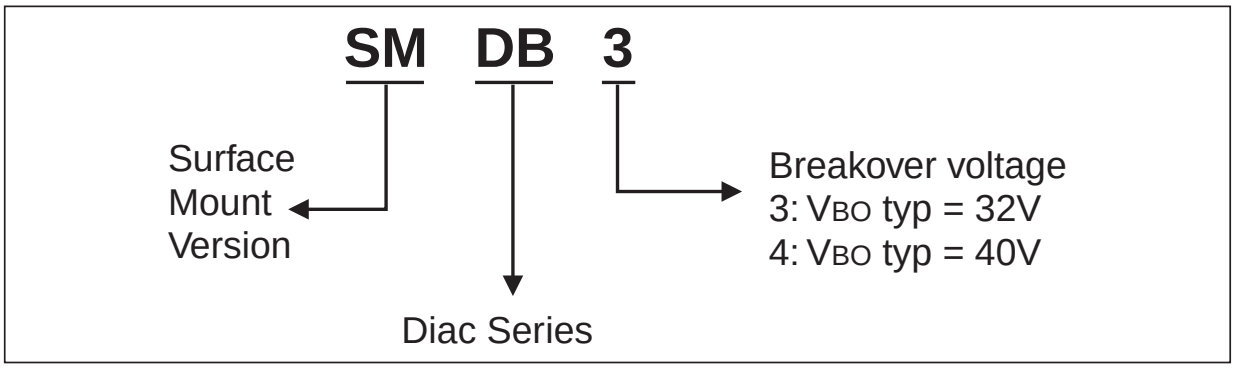

OTHER INFORMATION

Part Number	Marking	Weight	Base Quantity	Packing Mode
SMDB3	DB3	0.01 g	3000	Tape & Reel
DB3	DB3 (Blue Body Coat)	0.15 g	5000	Tape & Reel
DB4	DB4 (Blue Body Coat)	0.15 g	5000	Tape & Reel

Diagram 1: Voltage - current characteristic curve.

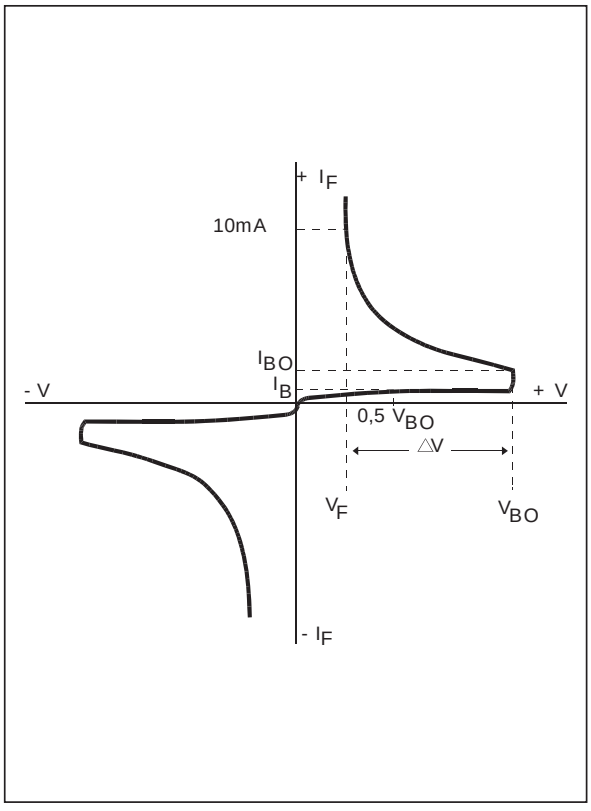

Diagram 2: Test circuit.

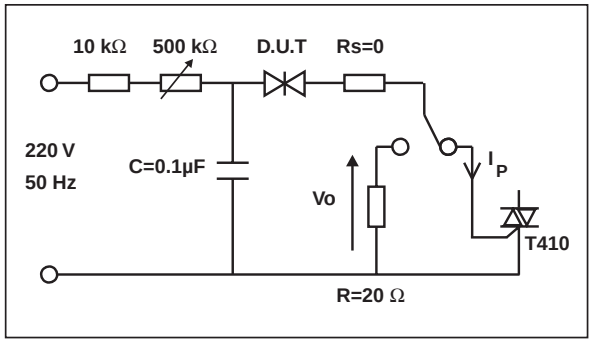

Diagram 3: Rise time measurement.

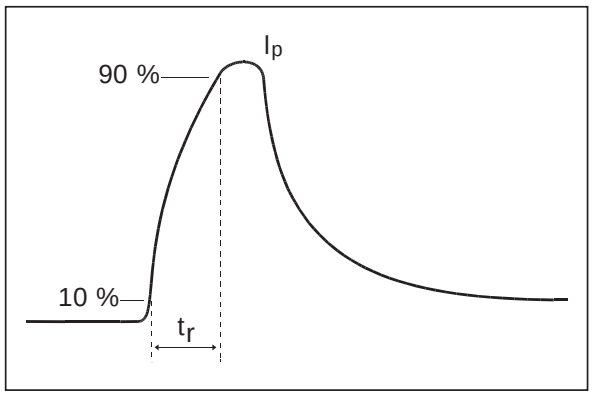

Fig. 1: Relative variation of VBO versus junction temperature (typical values).

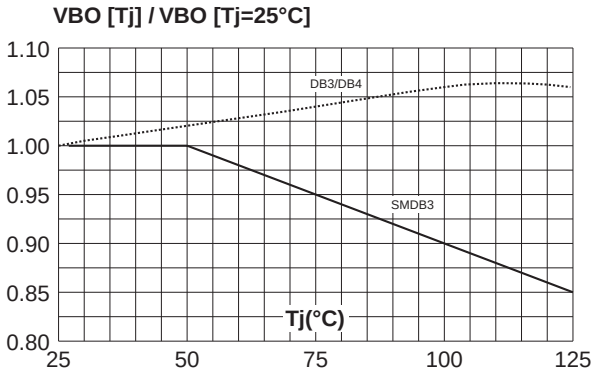

Fig. 2: Repetitive peak pulse current versus pulse duration (maximum values).

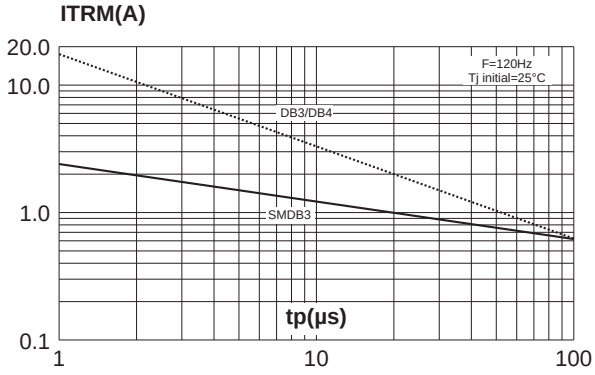

Fig. 3: Time duration while current pulse is higher 50mA versus C and Rs (typical values).

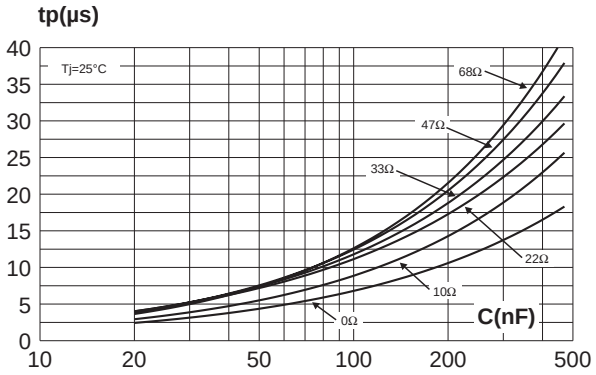

PACKAGE MECHANICAL DATA (in millimeters)
DO-35

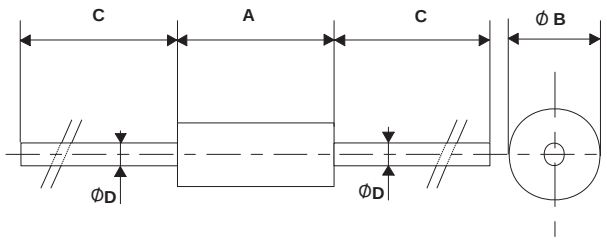

REF.	DIMENSIONS			
	Millimeters		Inches	
	Min.	Max.	Min.	Max.
A	3.05	4.50	0.120	0.177
B	1.53	2.00	0.060	0.079
C	28.00		1.102	
D	0.458	0.558	0.018	0.022

PACKAGE MECHANICAL DATA (in millimeters)

SOT-23

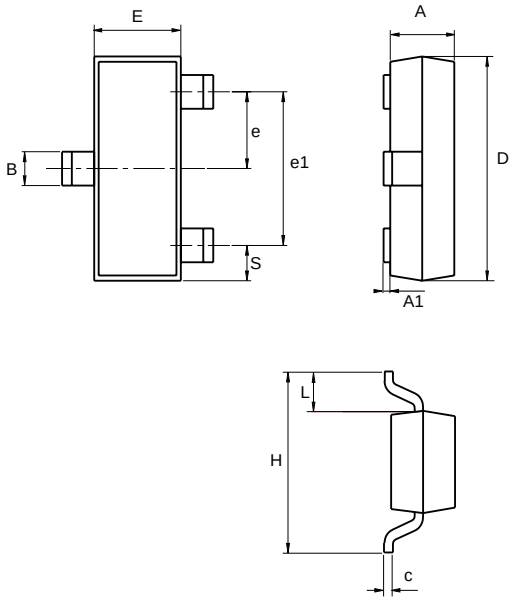

REF.	DIMENSIONS			
	Millimeters		Inches	
	Min.	Max.	Min.	Max.
A	0.89	1.4	0.035	0.055
A1	0	0.1	0	0.004
B	0.3	0.51	0.012	0.02
c	0.085	0.18	0.003	0.007
D	2.75	3.04	0.108	0.12
e	0.85	1.05	0.033	0.041
e1	1.7	2.1	0.067	0.083
E	1.2	1.6	0.047	0.063
H	2.1	2.75	0.083	0.108
L	0.6 typ.		0.024 typ.	
S	0.35	0.65	0.014	0.026

FOOTPRINT

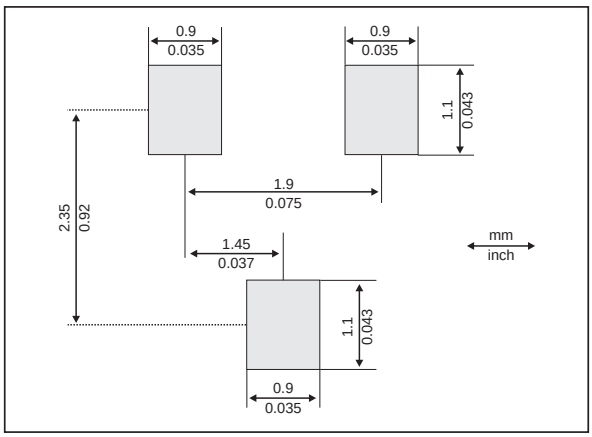

Information furnished is believed to be accurate and reliable. However, STMicroelectronics assumes no responsibility for the consequences of use of such information nor for any infringement of patents or other rights of third parties which may result from its use. No license is granted by implication or otherwise under any patent or patent rights of STMicroelectronics. Specifications mentioned in this publication are subject to change without notice. This publication supersedes and replaces all information previously supplied.
STMicroelectronics products are not authorized for use as critical components in life support devices or systems without express written approval of STMicroelectronics.

The ST logo is a registered trademark of STMicroelectronics

© 2001 STMicroelectronics - Printed in Italy - All rights reserved.

STMicroelectronics GROUP OF COMPANIES
Australia - Brazil - China - Finland - France - Germany - Hong Kong - India - Italy - Japan - Malaysia
Malta - Morocco - Singapore - Spain - Sweden - Switzerland - United Kingdom - U.S.A.

http://www.st.com