UTC LM79XX LINEAR INTEGRATED CIRCUIT

3 TERMINAL 1A NEGATIVE VOLTAGE REGULATOR

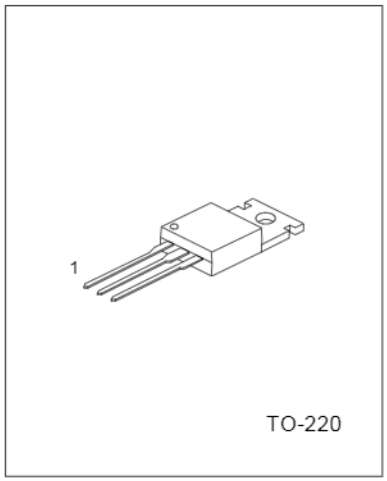

1:GND 2:Input 3:Output

DESCRIPTION

The UTC LM79XX series of three-terminal negative regulators are available in TO-220 package and with several fixed output voltage, making them useful in a wide range of application. Each type employs internal current limiting, thermal shut-down and safe area protection, making it essentially indestructible.

FEATURES

*Output current up to 1A
*-5V;-6V;-8V;-12V;-15V;-18V;-24V output voltage available
*Thermal overload protection
*Short circuit protection

BLOCK DIAGRAM

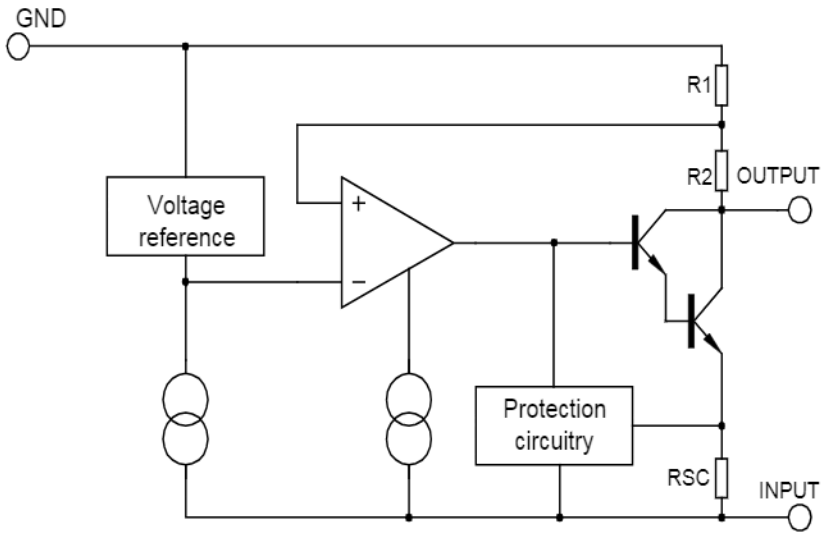

ABSOLUTE MAXIMUM RATINGS(Ta=25°C)

PARAMETER	SYMBOL	VALUE	UNIT
Input voltage	Vi	-35	V
Thermal resistance junction-air	R θ JA	65	°C /W
Thermal resistance junction-cases	R θ JC	5	°C /W
Operating Temperature	Topr	0 ~ +125	°C
Storage Temperature	Tstg	-65 ~ +150	°C

UTC7905 ELECTRICAL CHARACTERISTICS

(Refer to test circuits, 0<Tj<125°C,Io=500mA,Vi=-10V,Ci=33uF,Co=1uF, unless otherwise specified)

PARAMETER	SYMBOL	TEST CONDITIONS	MIN	TYP	MAX	UNIT
Output voltage	Vo	Tj=25°C	-4.80	-5.0	-5.20	V
		5.0mA<Io<1.0A,Po<15W Vi=-7V to -20V	-4.75		-5.25	V
Line regulation	ΔVo	Tj=25°C,Vi=-7V to -25V		10	100	mV
		Tj=25°C,Vi=-8V to -12V				mV
Load regulation	ΔVo	Tj=25°C,Io=5.0mA to 1.5A		10	100	mV
		Tj=25°C,Io=250mA to 750mA		3	50	mV
Quiescent current	IQ	Tj=25°C		3	6	mA
Quiescent current change	ΔIQ	Io=5mA to 1.0A		0.05	0.5	mA
		Vi=-7V to -25V		0.1	1.3	mA
Output voltage drift	ΔVo/ΔT	Io=5mA		-0.4		mV/°C
Output noise voltage	VN	f=10hz to 100kHz,Ta=25°C		100		μV
Ripple rejection	RR	f=120Hz, Vi=-8V to -18V	54	60		dB
Dropout voltage	Vo	Io=1.0A,Tj=25°C		2		V
Short circuit current	Isc	Vi=-35V,Ta=25°C		300		mA
peak current	Ipk	Tj=25°C		2.2		A

UTC7906 ELECTRICAL CHARACTERISTICS

(Refer to test circuits, 0<Tj<125°C,Io=500mA,Vi=-11V,Ci=2.2uF,Co=1uF,unless otherwise specified)

PARAMETER	SYMBOL	TEST CONDITIONS	MIN	TYP	MAX	UNIT
Output voltage	Vo	Tj=25°C	-5.76	-6.00	-6.24	V
		5.0mA<Io<1.0A,Po<15W Vi=-8V to -21V	-5.70		-6.30	V
Line regulation	ΔVo	Tj=25°C,Vi=-8V to -25V		10	120	mV
		Tj=25°C,Vi=-9V to -13V		5	60	mV
Load regulation	ΔVo	Tj=25°C,Io=5.0mA to 1.5A		10	120	mV
		Tj=25°C,Io=250mA to 750mA		3	60	mV
Quiescent current	IQ	Tj=25°C		3	6	mA
Quiescent current change	ΔIQ	Io=5mA to 1.0A			0.5	mA
		Vi=-8V to -25V			1.3	mA
Output voltage drift	ΔVo/ΔT	Io=5mA		-0.5		mV/°C
Output noise voltage	VN	f=10hz to 100kHz,Ta=25°C		130		μV
Ripple rejection	RR	f=120Hz, Vi=-9V to -19V	54	60		dB
Dropout voltage	Vo	Io=1.0A,Tj=25°C		2		V
Short circuit current	Isc	Vi=-35V,Ta=25°C		300		mA
peak current	Ipk	Tj=25°C		2.2		A

UTC7908 ELECTRICAL CHARACTERISTICS

(Refer to test circuits, 0<Tj<125°C,Io=500mA,Vi=-14V,Ci=2.2uF,Co=1uF,unless otherwise specified)

PARAMETER	SYMBOL	TEST CONDITIONS	MIN	TYP	MAX	UNIT
Output voltage	Vo	Tj=25°C	-7.68	-8.0	-8.32	V
		5.0mA<Io<1.0A,Po<15W Vi=-10.5V to -23V	-7.60		-8.40	V
Line regulation	ΔVo	Tj=25°C,Vi=-10.5V to -25V		10	100	mV
		Tj=25°C,Vi=-11.5V to -17V		5	80	mV
Load regulation	ΔVo	Tj=25°C,Io=5.0mA to 1.5A		12	160	mV
		Tj=25°C,Io=250mA to 750mA		4	80	mV
Quiescent current	IQ	Tj=25°C		3	6	mA
Quiescent current change	ΔIQ	Io=5mA to 1.0A		0.05	0.5	mA
		Vi=-11.5V to -25V		0.1	1.0	mA
Output voltage drift	ΔVo/ΔT	Io=5mA		-0.6		mV/°C
Output noise voltage	VN	f=10hz to 100kHz,Ta=25°C		175		μV
Ripple rejection	RR	f=120Hz, Vi=-11.5V to -21.5V	54	60		dB
Dropout voltage	Vo	Io=1.0A,Tj=25°C		2		V
Short citcuit current	Isc	Vi=-35V,Ta=25°C		300		mA
peak current	Ipk	Tj=25°C		2.2		A

UTC7912 ELECTRICAL CHARACTERISTICS

(Refer to test circuits, 0<Tj<125°C,Io=500mA,Vi=-18V,Ci=2.2uF,Co=1uF,unless otherwise specified)

PARAMETER	SYMBOL	TEST CONDITIONS	MIN	TYP	MAX	UNIT
Output voltage	Vo	Tj=25°C	-11.52	-12.0	-12.48	V
		5.0mA<Io<1.0A,Po<15W Vi=-14.5V to -27V	-11.40		-12.60	V
Line regulation	ΔVo	Tj=25°C,Vi=-14.5V to -30V		12	240	mV
		Tj=25°C,Vi=-16V to -22V		6	120	mV
Load regulation	ΔVo	Tj=25°C,Io=5.0mA to 1.5A		12	240	mV
		Tj=25°C,Io=250mA to 750mA		4	120	mV
Quiescent current	IQ	Tj=25°C		3	6	mA
Quiescent current change	ΔIQ	Io=5mA to 1.0A		0.05	0.5	mA
		Vi=-14.5V to -30V		0.1	1.0	mA
Output voltage drift	ΔVo/ΔT	Io=5mA		-0.8		mV/°C
Output noise voltage	VN	f=10hz to 100kHz,Ta=25°C		200		μV
Ripple rejection	RR	f=120Hz, Vi=-15V to -25V	54	60		dB
Dropout voltage	Vo	Io=1.0A,Tj=25°C		2		V
Short circuit current	Isc	Vi=-35V,Ta=25°C		300		mA
peak current	Ipk	Tj=25°C		2.2		A

UTC7915 ELECTRICAL CHARACTERISTICS

(Refer to test circuits, 0<Tj<125°C, Io=500mA,Vi=-23V,Ci=2.2uF,Co=1uF,unless otherwise specified)

PARAMETER	SYMBOL	TEST CONDITIONS	MIN	TYP	MAX	UNIT
Output voltage	Vo	Tj=25°C	-14.40	-15.0	-15.60	V
		5.0mA<Io<1.0A,Po<15W Vi=-17.5V to -30V	-14.25		-15.75	V
Line regulation	ΔVo	Tj=25°C,Vi=-17.5V to -30V		12	300	mV
		Tj=25°C,Vi=-20V to -26V		6	150	mV
Load regulation	ΔVo	Tj=25°C,Io=5.0mA to 1.5A		12	300	mV
		Tj=25°C,Io=250mA to 750mA		4	150	mV
Quiescent current	IQ	Tj=25°C		3	6	mA
Quiescent current change	ΔIQ	Io=5mA to 1.0A		0.05	0.5	mA
		Vi=-17.5V to -30.5V		0.1	1.0	mA
Output voltage drift	ΔVo/ΔT	Io=5mA		-0.9		mV/°C
Output noise voltage	VN	f=10hz to 100kHz,Ta=25°C		250		μV
Ripple rejection	RR	f=120Hz, Vi=-18.5V to -28.5V	54	60		dB
Dropout voltage	Vo	Io=1.0A,Tj=25°C		2		V
Short circuit current	Isc	Vi=-35V,Ta=25°C		300		mA
peak current	Ipk	Tj=25°C		2.2		A

UTC7918 ELECTRICAL CHARACTERISTICS

(Refer to test circuits, 0<Tj<125°C,Io=500mA,Vi=-27V,Ci=2.2uF,Co=1uF,unless otherwise specified)

PARAMETER	SYMBOL	TEST CONDITIONS	MIN	TYP	MAX	UNIT
Output voltage	Vo	Tj=25°C	-17.28	-18.0	-18.72	V
		5.0mA<Io<1.0A,Po<15W Vi=-21V to -33V	-17.10		-18.90	V
Line regulation	ΔVo	Tj=25°C,Vi=-21V to -33V		15	360	mV
		Tj=25°C,Vi=-24V to -30V		8	180	mV
Load regulation	ΔVo	Tj=25°C,Io=5.0mA to 1.5A		15	360	mV
		Tj=25°C,Io=250mA to 750mA		5.0	180	mV
Quiescent current	IQ	Tj=25°C		3	6	mA
Quiescent current change	ΔIQ	Io=5mA to 1.0A			0.5	mA
		Vi=-21V to -32V			1.0	mA
Output voltage drift	ΔVo/ΔT	Io=5mA		-1		mV/°C
Output noise voltage	VN	f=10hz to 100kHz,Ta=25°C		300		μV
Ripple rejection	RR	f=120Hz, Vi=-22V to -32V	54	60		dB
Dropout voltage	Vo	Io=1.0A,Tj=25°C		2		V
Short circuit current	Isc	Vi=-35V,Ta=25°C		300		mA
peak current	Ipk	Tj=25°C		2.2		A

UTC7924 ELECTRICAL CHARACTERISTICS

(Refer to test circuits, 0<Tj<125°C,Io=500mA,Vi=-33V,Ci=2.2uF,Co=1uF,unless otherwise specified)

PARAMETER	SYMBOL	TEST CONDITIONS	MIN	TYP	MAX	UNIT
Output voltage	Vo	Tj=25°C	-23.04	-24	-24.96	V
		5.0mA<Io<1.0A,Po<15W Vi=-27V to -38V	-22.80		-25.20	V
Line regulation	ΔVo	Tj=25°C,Vi=-27V to -38V		15	480	mV
		Tj=25°C,Vi=-30V to -36V		8	240	mV
Load regulation	ΔVo	Tj=25°C,Io=5.0mA to 1.5A		15	480	mV
		Tj=25°C,Io=250mA to 750mA		5.0	240	mV
Quiescent current	IQ	Tj=25°C		3	6	mA
Quiescent current change	ΔIQ	Io=5mA to 1.0A			0.5	mA
		Vi=-27V to -38V			1.0	mA
Output voltage drift	ΔVo/ΔT	Io=5mA		-1		mV/°C
Output noise voltage	VN	f=10hz to 100kHz,Ta=25°C		400		μV
Ripple rejection	RR	f=120Hz, Vi=-28V to -38V	54	60		dB
Dropout voltage	Vo	Io=1.0A,Tj=25°C		2		V
Short circuit current	Isc	Vi=-35V,Ta=25°C		300		mA
peak current	Ipk	Tj=25°C		2.2		A

APPLICATION CIRCUITS

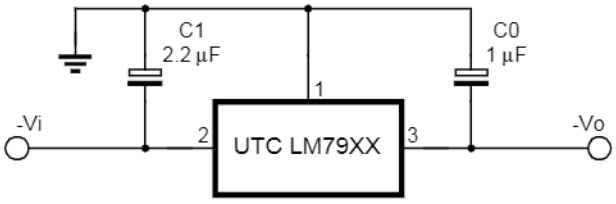

Fig.1 Fixed output regulator

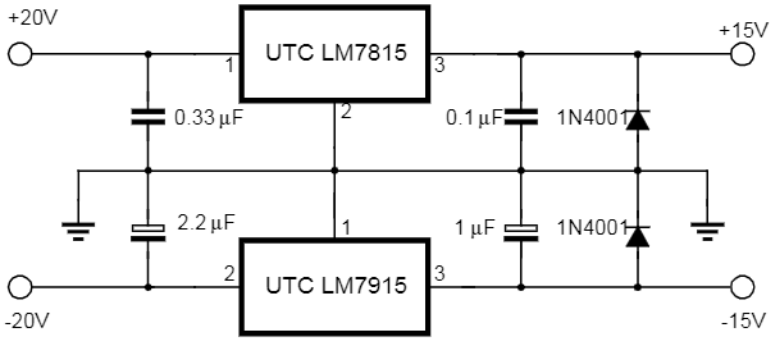

Fig.2 Split power supply(+-15V,1A)

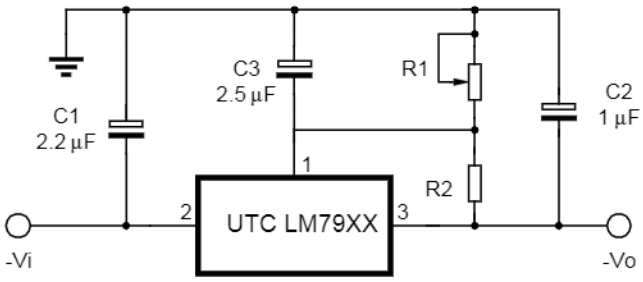

Fig.3 Circuit for increasing output voltage